LIGHT FIXTURE SCHEDULE

TYPE	MANUFAC.	CATALOG#	VOLT.	LAMP TYPE	WATTS	DESCRIPTION / REMARKS	QTY.
A4	GE LIGHTING	LUS-C4-A-0-52-V1-T-35-VQ-CS -WHTE-BC	MVOLT	LED	37	4 1/2" WIDE X 8" HIGH X4' LONG LED LINEAR LIGHT FIXTURE, 3500K. FIXTURE SUSPENDED AT 14'-0" A.F.F. IN SALES AREA 101. REFER TO MOUNTING DETAIL 3/E1.0. SEE NOTE 2,4,6,7.	8
A8	GE LIGHTING	LUS-C8-A-0-A0-V1-T-35-VQ-CS -WHTE-BC	MVOLT	LED	73	4 1/2" WIDE X 8' HIGH X 8' LONG LED LINEAR LIGHT FIXTURE, 3500K. FIXTURE SUSPENDED AT 14'-0" A.F.F. IN SALES AREA 101. REFER TO MOUNTING DETAIL 3/E1.0. SEE NOTE 2,4,6,7.	91
A8NL	GE LIGHTING	LUS-C8-A-0-A0-V1-T-35-VQ-CS -WHTE-BC	MVOLT	LED	73	4 1/2" WIDE X 8" HIGH X 8' LONG LED LINEAR LIGHT FIXTURE, 3500K. FIXTURE SUSPENDED AT 14'-0" A.F.F. IN SALES AREA 101. CIRCUIT SECOND LINE FOR NIGHT LIGHT FIXTURE. REFER TO DETAIL 5/E1.0. SEE NOTE 2,4,6,7.	11
BA	METALUX	22FP4235C	MVOLT	LED	39	2'X2' LED FLAT DIFFUSED LENS LAY-IN LIGHT FIXTURE, 3500K. 4300 LUMENS	52
CA	LITHONIA	WL4-40L-EZ1-LP835	MVOLT	LED	40	5" WIDE X 4' HIGH X 4' LONG LED LENSED WALL BRACKET LIGHT FIXTURE, 3500K. MOUNT FIXTURE AT 8'-0" AFF, UNO.	2
CB	COOPER	S122DW-C-1005D-8-30-4FO-1-U-DD-F-W	MVOLT	LED	43	2.4" WIDE X 4" HIGH X 4' LONG LED LENSED WALL MOUNTED LIGHT FIXTURE , 3000K. MOUNT FIXTURE AT 9'-0" AFF, UNO.	3
EM	LITHONIA	ELM6L-UVOLT-LTP-SDRT	MVOLT	LED	11	EMERGENCY BATTERY UNIT WITH 2-LAMP HEADS. EMERGENCY LIGHT FIXTURES IN MAIN SALES & AREAS TO ROOF DECK SHALL BE AT 16'-0" AFF TO BOTTOM OF UNIT. EMERGENCY LIGHT FIXTURES IN AREAS WITH CEILINGS SHALL BE SURFACE MOUNTED ON CEILING. EMERGENCY LIGHT FIXTURES IN FISH PREP 120 & FISH EQUIPMENT121 SHALL BE AT 12'-0" AFF TO BOTTOM OF UNIT.	41
G4	GE LIGHTING	LUS-I4-A-0-52-V1-T-35-VQ-CS-WHTE	MVOLT	LED	37	4 1/2" WIDE X 8" HIGH X 4' LONG LED LINEAR LIGHT FIXTURE, 3500K. IN RECEIVING 117 MOUNT LIGHTS IN BETWEEN JOISTS, ABOVE BOTTOM CHORD OF BAR JOISTS. IN FISH PREP. 120 MOUNT LIGHT AT 10'-0" AFF.	22
L	LUMARK	XTOR6BRL	MVOLT	LED	58	LED WALL PACK. MOUNT AT 14'-6" A.F.F. TO CENTERLINE OF FIXTURE UNLESS NOTED OTHERWISE. DARK BRONZE FINISH. SEE FLOOR PLAN FOR ADDITIONAL INFORMATION.	14
M	GE LIGHTING	RC-6-15-8-35-NR-SD-CL-MR-2V-10	277	LED	19	6" LED OPEN DOWN LIGHT WITH GE #93025091 - FRAMER KIT. UL LISTED FOR DAMP LOCATIONS	3
S	LITHONIA	LQM-S-W-3-R-120/277-ELN	MVOLT	LED	1	EXIT SIGN, RED LETTERS, WITH BATTERY PACK. SEE DETAIL 4/E1.0. PENDANT MOUNTED EXIT SIGN(S) IN MAIN SALES AND/OR AREAS OPEN TO ROOF DECK SHALL BE AT 12'-0" AFF TO BOTTOM OF SIGN.	18
W	LITHONIA	ELM6L-UVOLT-LTP-SDRT-LLH	MVOLT	LED	-	EMERGENCY BATTERY UNIT W/O LAMP HEADS TO PROVIDE BATTERY POWER FOR EXTERIOR REMOTE HEADS.	3
X	LITHONIA	ELMRW-SP640L-DWHXD-T	6 (LOW VOLT.)	(2) 1.5W LAMPS, FURNISHED W/FIXTURE	3	REMOTE LAMP HEADS FOR EXTERIOR EMERGENCY LIGHTING. CONTRACTOR SHALL PROVIDE MANUFACTURER RECOMMENDED WIRE SIZE BETWEEN BATTERY POWER PACK AND REMOTE HEADS FOR VOLTAGE DROP. MOUNT 1'-0" ABOVE DOOR HEADER UNLESS NOTED OTHERWISE.	3

1. CONTRACTOR SHALL CONTACT LIGHTING DISTRIBUTOR FOR ORDERING INFORMATION. THIS IS A REQUIRED VENDOR, SEE REQUIRED VENDOR LIST ON F2.0
2. SEE PLAN FOR LENGTH AND QUANTITY OF LINEAR FIXTURES PER ROW FOR TYPES 'A4', 'A8' AND 'A8NL'. (37 WATTS PER 4 FOOT LENGTH)
3. ELECTRICAL CONTRACTOR TO VERIFY ALL QUANTITIES OF LIGHT FIXTURES PRIOR TO ORDERING FIXTURES.
4. FURNISH FIXTURE WITH ALL NECESSARY STARTER KITS, JOINERS, CONNECTIONS, ENDCAPS, ETC. FOR A COMPLETE AND CONTINUOUS FIXTURE LENGTH RUN.
5. **ALL LIGHT FIXTURES IN THIS SCHEDULE MAY NOT BE APPLICABLE TO THIS PROJECT.**
6. LIGHT FIXTURES TO BE SUPPLIED WITH 21" MOUNTING CABLES, POWER FEED CABLE, AND MOUNTING BRACKETS WITH SUSPENSION KIT.
7. GE STARTER KIT (10 ROW) #93046696-WH FOR CONTINUOUS ROW FIXTURES. PROVIDE (1) STARTER KIT PER CONTINUOUS ROW.

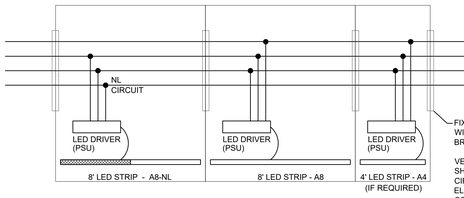

4-WIRE DROP
- BLACK = LINE #1 - SWITCHED HOT FROM NEXREV
- WHITE = NEUTRAL #1
- GREEN = COMMON GROUND
- BROWN = LINE #2 - UNSWITCHED HOT (NIGHT LIGHTS)

FIXTURE TO FIXTURE BUILT-IN CONNECTOR INCLUDING WIRING CIRCUIT CONNECTORS, CONTINUOUS CAPS, AND BRIDGE LEVERS.

VERIFY THAT ALL FIXTURE TO FIXTURE COMPONENTS SHIPPED FROM LIGHTING SUPPLIER CREATE PROPER CIRCUITING INSTALLATION AS INDICATED ON PLAN. ELECTRICAL CONTRACTOR TO PROVIDE ANY ADDITIONAL CONNECTIONS AS REQUIRED FOR A COMPLETE SYSTEM.

5 / E1.0 SALES AREA LIGHTING FIXTURE WIRING DETAIL
SCALE: N.T.S.

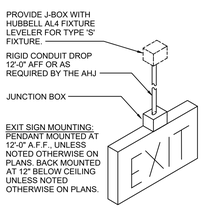

4 / E1.0 PENDANT MOUNT EXIT SIGN
SCALE: N.T.S.

NOTES:
1. CONTRACTOR TO PROVIDE ALL NECESSARY HARDWARE FOR INSTALLATION.
2. LIGHT FIXTURES THAT RUN PARALLEL WITH THE JOISTS SHALL REQUIRE TWO (2) SEPARATE PIECES OF UNISTRUT, ONE (1) AT EACH END OF LIGHT FIXTURE FOR THE AIRCRAFT CABLE HANGERS.
3. AIR CRAFT CABLE TO BE TRIMMED AFTER FIXTURE INSTALLATION.
4. VERIFY LIGHT FIXTURE AND INSTALLATION WITH PETSMART PROJECT REPRESENTATIVE(CONFIGURATION VARIES PER PROJECT).
5. CONTRACTOR TO BID GREATER THAN 10 FEET AIR CRAFT CABLE BASED ON SITE SPECIFIC CONDITIONS.
6. PROVIDE AND INSTALL SEISMIC RESTRAINT FOR LIGHT FIXTURES AS REQUIRED BY LOCAL BUILDING CODE.

4-WIRE DROP
- BLACK = LINE #1 - SWITCHED HOT FROM NEXREV
- WHITE = NEUTRAL #1
- GREEN = COMMON GROUND
- BROWN = LINE #2 - UNSWITCHED HOT (NIGHT LIGHTS)
- JUNCTION BOX MOUNTED TO UNISTRUT.

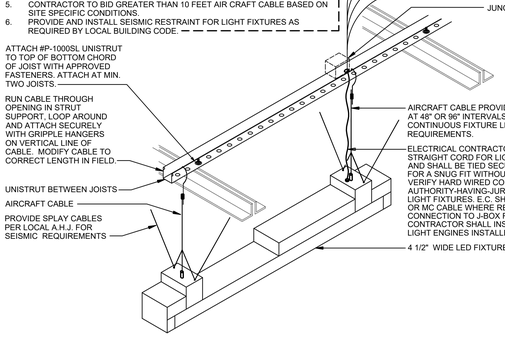

3 / E1.0 LIGHTING FIXTURE MOUNTING DETAIL
SCALE: N.T.S.

NOTE:
IF CONDUIT PIPING LAYOUT IS NOT SHOWN, GROUP CONDUIT/PIPE ROUTE FOR MINIMUM SUPPORTS AND HOLD TIGHT UNDER SIDE OF ROOF DECK. COORDINATE WITH ALL TRADES.

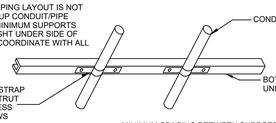

MINIMUM SPACING BETWEEN SUPPORTS:
CONDUIT ---------- 1/2" THRU 1-1/4" ---------- 3' EMT
OR ---------- 1-1/2" THRU 2" ---------- 8'

2 / E1.0 CONDUIT/PIPE SUPPORT
SCALE: N.T.S.

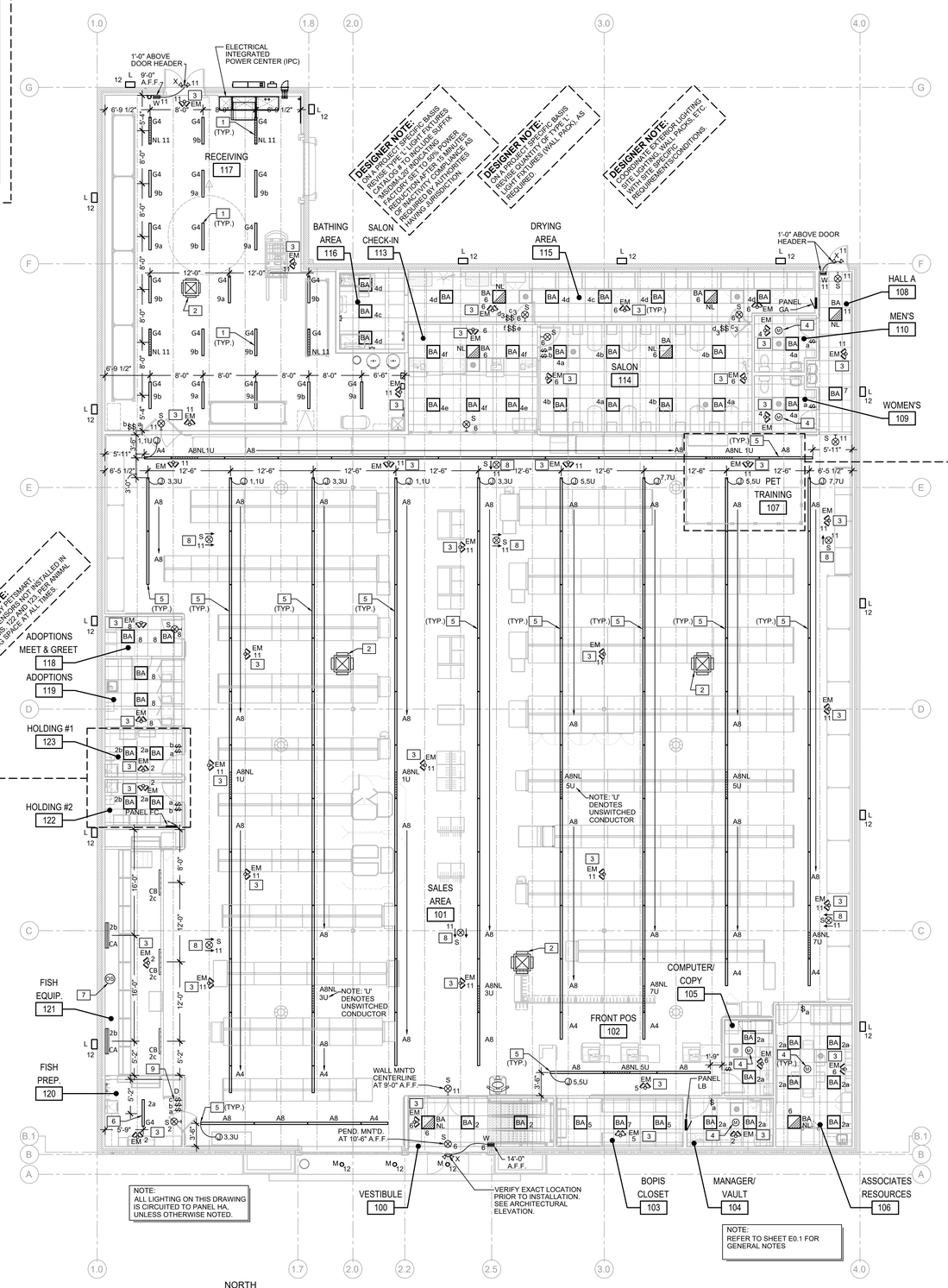

1 / E1.0 LIGHTING FLOOR PLAN
SCALE: 1/8" = 1' - 0"

DESIGNER NOTE: DESIGNER IS SPECIF. IN LIGHT FIXTURE SCHEDULE IS BASED ON A LIGHT FIXTURE IS SUPPLIED BY ANOTHER SOURCE (OWNER PERSONAL ASSET, ETC.) OWNER PERSONAL ASSET, ETC. PROVIDED & INSTALLED BY CONTRACT. CONTACT INFORMATION

DESIGNER NOTE: ON A PROJECT SPECIFIC BASIS, REVISE TYPE, L1 LIGHT FIXTURES MEDIUM, 2 INDICATING FACTORY MOUNTED 58 POWER REDUCTION KIT TO 58 POWER OF PROPERTY. COMPLIANCE AS REQUIRED BY AUTHORITIES HAVING JURISDICTION

DESIGNER NOTE: ON A PROJECT SPECIFIC BASIS, REVISE QUANTITY OF TYPE A, LIGHT FIXTURES (WALL PACK), AS REQUIRED

DESIGNER NOTE: SITE VISITED EXTERIOR LIGHTING WITH SITE SPECIFIC PACKS, ETC. REQUIREMENTS/CONDITIONS

DESIGNER NOTE: DESIGNER TO MAKE CERTAIN AT LEAST 1 FIXTURE IS SUPPLIED IN THE MAIN SALES AREA WITH A BATTERY BACK UP. LOCATION IS AS CLOSE TO CENTER OF TRAINING AREA FIXTURE AS POSSIBLE.

DESIGNER NOTE: ENSURE THAT DESIGN COMPLIES WITH APPLICABLE ENERGY CODE, AND ADD ADDITIONAL SWITCHES AS REQUIRED.

DESIGNER NOTE: AS REQUIRED BY PETSMART, OCCUPANCY SENSORS ARE NOT INSTALLED IN THESE ROOMS: 102 AND 122 REPLACE OCCUPANCY SENSOR AT ALL TIMES.

DESIGNER NOTE: ON A PROJECT SPECIFIC BASIS WHEN REQUIRED BY CODE OF A.H.J. DESIGNER SHALL INCORPORATE APPROPRIATE DETAILS, NOTES AND PERTINENT INFORMATION AS NECESSARY TO COMPLY WITH SEISMIC REQUIREMENTS.

DESIGNER NOTE: ON A PROJECT SPECIFIC BASIS, REVISE LIGHT FIXTURE SPACING FROM 12'-0" TO 11'-6" (EVERY 3 FOR WIDER STORE DIMENSIONS.

DESIGNER NOTE: ENSURE THAT ALL FIXTURE TO FIXTURE LEVELS ARE MAINTAINED AT THE MAIN SALES AREA WITH 58 FOOT CANDLE AVERAGE (45 TO 58 FOOT CANDLE RANGE) WHEN A 30 FOOT CANDLE AVERAGE IS BEING USED.

DESIGNER NOTE: ENSURE THAT ALL FIXTURE TO FIXTURE LEVELS ARE MAINTAINED AT THE MAIN SALES AREA WITH 30 FOOT CANDLE AVERAGE WHEN A NON-PROTOTYPE BUILDING IS BEING USED.

LIGHTING KEY NOTES

1. RECEIVING LIGHTS: MOUNT IN BETWEEN JOISTS ABOVE BOTTOM CHORD OF BAR JOISTS.
2. SUPPLY AIR DROP BOX: OUTLINE OF RTU SUPPLY AIR DROP BOX SHOWN HERE TO AVOID INTERFERENCE WITH SALES/RECEIVING AREA LIGHT FIXTURES.
3. EMERGENCY FIXTURE: MOUNTED TO UNDERSIDE OF JOISTS IN OPEN CEILING AREAS TO CREATE A PATH OF EGRESS. PROVIDE UNSWITCHED HOT WIRE TO BATTERY BACK-UP SYSTEM.
4. SENSOR/SWITCH SEQUENCE WIRING: ROUTE LIGHTING CIRCUIT WIRING THRU (1) CEILING MOUNTED OCCUPANCY SENSOR, (2) THRU TO WALL SWITCH, (3) THEN TO LIGHT FIXTURE FOR A COMPLETE OPERABLE LIGHTING CONTROL SYSTEM.
5. SALES FIXTURE MOUNTING: PENDANT FIXTURES MOUNTED AT 14'-0" AFF.
6. FISH AREA FIXTURE MOUNTING: PENDANT FIXTURE MOUNTED AT 10'-0" AFF.
7. FISH AREA OCCUPANCY SENSOR: PROVIDE OCCUPANCY SENSOR FOR SECONDARY CONTROL OF LIGHT FIXTURES BEHIND FISH TANKS. **MOUNT SENSOR ON WALL BEHIND TANKS AT 84" AFF.**
8. EXIT SIGN: EXIT SIGN TO BE PENDANT MOUNTED AT 12'-0" AFF, REFER TO DETAIL 4/E1.0.
9. DIMMER SWITCH: PROVIDE LUTRON DVSTV-WH (OR APPROVED EQUAL), 8A, 120/277V (WHITE). CONNECT DIMMER SWITCH TO TYPE CB LIGHT FIXTURES AT FISH AREA. DIMMER WIRES SHALL BE GRAY/VIOLET. DO NOT RUN LOW-VOLTAGE DIMMING WIRES WITH LINE VOLTAGE WIRES.

TENANT: PETSMART
19601 North 27th Avenue
Phoenix, Arizona 85027 - (623) 580-6100

PROJECT:
16K 2025 US INSTRUCTION SET

FEBRUARY 12, 2025

ARCHITECT:

CONSULTANT:

SEAL:

CITY SEAL:

DISCLAIMER:
THIS DRAWING AND DESIGN IN COPYRIGHT PROTECTED WHICH SHALL NOT BE USED, REPRODUCED OR REVISED WITHOUT WRITTEN PERMISSION BY PETSMART. THE CONTRACTOR SHALL CHECK AND VERIFY ALL DIMENSIONS AND UTILITY LOCATIONS AND REPORT ALL ERRORS AND OMISSIONS PRIOR TO COMMENCING WORK.
THIS DRAWING IS NOT TO BE SCALED.

ISSUED FOR:

#	DESCRIPTION	DATE

PROJECT NO: 16K 2025 US INSTRUCTION SET

ORIGINAL SCALE: AS INDICATED

IF THIS BAR IS NOT 1" LONG, ADJUST YOUR PLOTTING SCALE

DRAWN BY: XXX

CHECKED BY: XXX

PAGE # 41 OF: 47

DISCIPLINE: ELECTRICAL

TITLE:
LIGHTING FLOOR PLAN

SHEET NUMBER:
E1.0